
NAZARBAYEV UNIVERSITY
RESEARCH AND INNOVATION SYSTEM

# **Prototyping center** and its capabilities

# General information

Prototyping center is a structural subdivision of the PI "NURIS", aimed on the production of prototypes, parts and structures, including design work.

**Prototyping Center accepts requests through:**

**machineshop@nu.edu.kz**


The Prototyping Center provides the services of the following specialists:

- Design Engineer
- Engineer - technologist
- CNC  machine Engineer
- Electronic Engineer
- Turner
- Miller
- Welder

# Activities

## of the Prototyping Center

### Designing:

- Digitization of sketch drawings;
- Development of design documentation;
- Calculation of structural loads;
- Technological process;
- Development of electronic circuits, electronic boards and devices.

### Manufacturing of parts, mechanisms and structures:

- Materials: steel, nonferrous metal, wood, plastics, etc.
- Processes: machining, welding, laser cutting? Bending sheet materials and final assembling.

### Modification and repairs:

- repair and refinement of mechanical parts of equipment;
- modification of structures and mechanisms;

NAZARBAYEV UNIVERSITY
RESEARCH AND INNOVATION SYSTEM

# Training courses

**The Prototyping Center also offers practical courses for groups of students up to 15 people:**

- ★ **Machining** (Turning, Milling)
- ★ **Welding and soldering of metals** (gas, arc, electro-contact)
- ★ **Work on the equipment (machines) with CNC** (3D printer, desktop milling machine, portal milling machine, 5 axis milling machine, laser cutting machine and sheet bending).

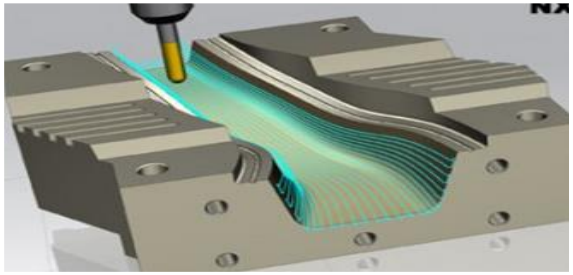

# Training courses

For the group of students of the School of Engineering a course - «Machining» been conducted

## Course programm

- Industrial Safety.
- Basics of welding.
- Basics of Manufacturing Engineering. Types of work pieces and machining allowances.
- Measurement equipment.
- Basics concepts on precision and surface quality of parts.
- Tool materials. The abrasive tool.
- Machining - General Course on drilling machines.
- Machining on milling machines.
- Machining  on turning machines.

NAZARBAYEV UNIVERSITY RESEARCH AND INNOVATION SYSTEM

TECHNOPARK

NAZARBAYEV UNIVERSITY

CERTIFICATE

Issued by:

YERBOL AKHMETBEKOV

**This is to certify that the person above attended the program from "18" November 2014 to "30" January 2015:**

- Industrial Safety.
- Basics of welding.
- Basics of of Manufacturing Engineering. Types of workpieces and machining allowances.
- Measurement equipment.
- Basic concepts of precision and surface quality of parts.
- Tool materials. The abrasive tool.
- Machining - General Course. Machining on drilling machines.
- Machining on milling machines.
- Machining on turning machines.

Within the scope of 45 hours.
registration number: 8453694

General Director, Baigarin Kanat

Department Chair, Anatoli Vakhguelt

**New equipment new possibilities**

# CNC Machine-tool equipment

**We are pleased to announce that we have new equipment:**

## DMU 50 - 5 Axis Milling Center

- The DMU-50 machines open a new era in production, training and work
- A milling center designed to machine almost all metals including magnesium, titanium.
- This machine will allow to process high-precision parts of the most difficult shape.

Range of spindle speeds from 20 to 15 000 rpm
Pallet working surface: 630 x 500 mm
Tilt range -35 to + 110 °, rotation axis 360 °

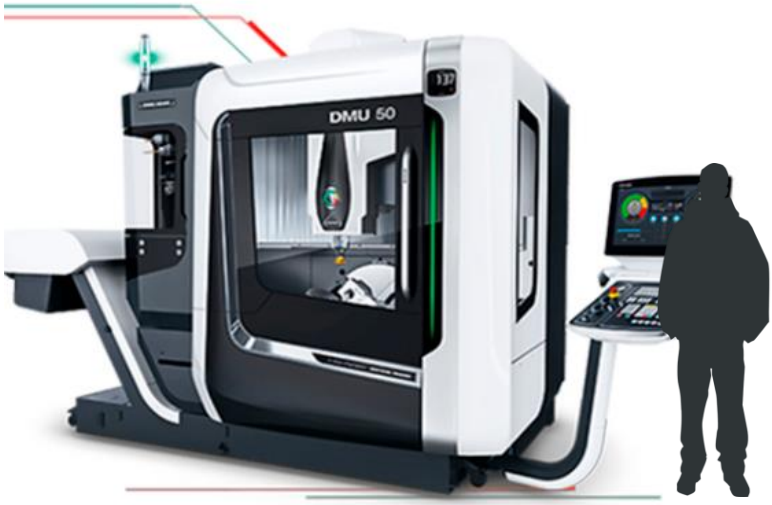


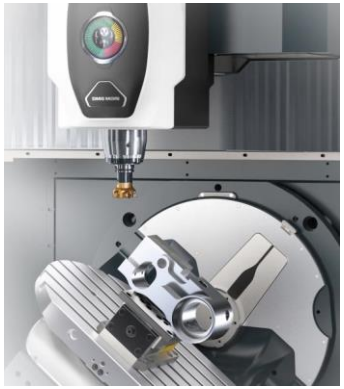

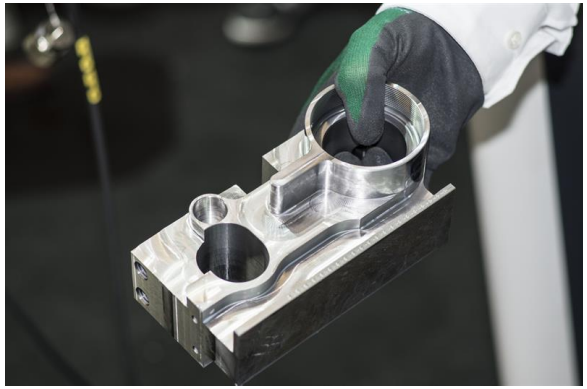

# CNC Machine-tool equipment

**New equipment new possibilities**

## Laser cutting machine «BODOR P3015»

- Allows cutting metal sheets
- Materials: **Steel, Stainless steel, Brass, Aluminum**
- **Environment Friendly And Healthy**
- CNC: high efficiency and simplicity
- Gives opportunity to make **BODY PRODUCTS**

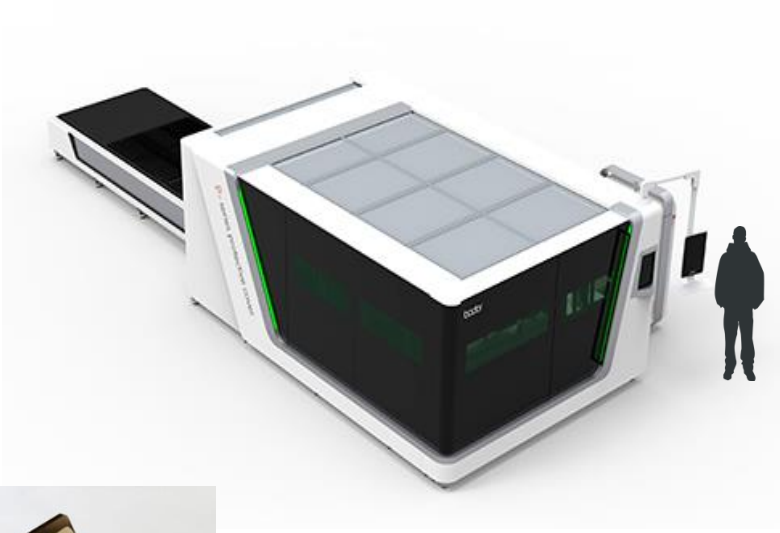

**Working Area - 3000mm*1500mm**

**Laser Output Power - 1500w**

**X/Y-axis positioning accuracy - 0.05mm**

**X/Y-axis repositioning accuracy - 0.03mm**

**Steel – 12mm**

**Stainless steel – 6mm**

**Brass – 5mm**

**Aluminum – 5mm**

**New equipment new possibilities**

# CNC Machine-tool equipment

## UZMA E CAP 25100


- Manufacturing **BODY PRODUCTS**
- CNC control
- Bending metals up to 20 мм

**Bending length - 2600 mm**
**2D-Graphical CNC control**
**Bending power - 100 T**

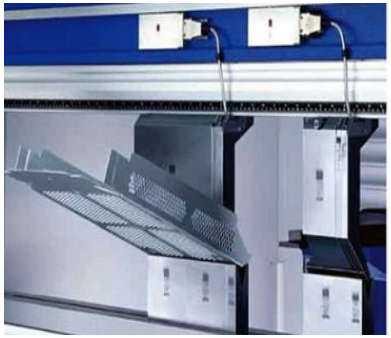

# Machine-tool equipment

## Milling machines

- ➔ Milling machine Optimum | BF 46 TC
- ➔ Milling machine Optimum | BF 20 Vario

## Lathes

- ➔ Screw-cutting lathe | Optimum D 330 x 1000 DPA
- ➔ Screw-cutting lathe | Knuth V-Turn 410/1000
- ➔ Screw-cutting lathe | Quantum D 250 x 550 Vario

## Drilling machines

- ➔ Vertical Drilling Machine | Quantum B 32

## Cutting machines

- ➔ Band-Sawing Machine | Quantum S 181
- ➔ Pendulum Saw | Optimum CS315
- ➔ Combined sheet bending | Quantum SAR 1000
- ➔ Hydraulic shears for profile steel | Knuth HPS 55 S


# Features of Milling Machines

# Machine-tool equipment

## FU450MRApUGNC

| Characteristics | BF 20 Vario | BF 46 TC | FU450MRA |
|---|---|---|---|
| Rotational speed of the spindle (rpm) | 90 - 3000 | 115 - 3100 | 28-1400 |
| Power of spindle (kW) | 0,85 | 2,2 | **10** |
| Table size (mm) | 500x180 | 850x240 | 400x1600 |
| Moving along the axes (X / Y / Z) | 280/175/280 | 500/250/541 | 1000/300/600 |

**NEW**

# Machine-tool equipment

## Features of Lathes

| Characteristics | D 330 x 1000 DPA | V-Turn 410/1000 |
|---|---|---|
| Max. workpiece length (mm) | 1000 | 1000 |
| Max. Workpiece diameter (mm) | 330 | 410 |
| Technological course of X/Z axes (mm) | 195/100 | 210/140 |
| Spindle rotational speed (rpm) | 45 - 1800 | 30 - 3000 |

## Cutting equipment capabilities

# Machine-tool equipment

| Name | Characteristics |
|---|---|
| Band-Sawing Machine **Quantum S 181** | Max. diameter of cut of round billet, 90°, мм – 178<br>Max. diameter of cut of round billet, 45°, мм – 110<br>Max. cut size of a rectangular workpiece, 90°, мм – 178 x 240 / 50 x 300<br>Max. cut size of a rectangular workpiece, 45°, мм – 170 x 110 |
| Pendulum Saw **Optimum CS315** | Max. diameter of cut of round billet, 90°, мм – 85<br>Max. diameter of cut of round billet, 45°, мм – 85<br>Max. cut size of a rectangular workpiece, 90°, мм – 130 x 70<br>Max. cut size of a rectangular workpiece, 45°, мм – 90 x 70 |
| Combined sheet bending **Quantum SAR 1000** | The maximum thickness of the bent billet, mm: Steel – 1mm, aluminum / copper – 1.5mm, Brass – 1mm<br>Maximum cutting size – 1016 x 1 мм<br>Minimum radius of bending – 42 мм<br>Maximum workpiece width – 1016 мм |
| Hydraulic shears for profile steel **Knuth HPS 55 S** | **punching die**: Max. throughput. at stamping - Ø 40 x 10 mm,<br>**sheet shears**: size of cut flat section (width / thickness) - 300/20 mm,<br>**Scissors for a corner:** under 90 ° - 120x120x12mm; under 90 ° - 70x70x10mm; |

# Welding

There are works on welding metals in the Prototyping Center: **steel, aluminum, stainless steel, copper, titanium** and others.

**Types of welding:** Fusion welding (gas and arc), Pressure welding (Spot Pulse)

| Name: | Characteristics: |
|---|---|
| Spot Welding Machine **MT-501** | Welding thickness range up to 2.0 + 2.0 mm<br>The greatest compression force up to 350 kgf |
| Argon-arc welding machine **ESAB Caddy Tig 2200i AC/DC** | It is possible to weld with the highest quality all types of materials (including aluminum and aluminum alloys up to 5 mm thick, stainless steel, copper, titanium). |
| Welding inverter **Сварог MMA-315 IGBT INVERTER** | long-term welding of thick-walled steel |
| Spot Welding Machine **Digital Plus 5500** | Spot welding of thin steel (up to 1.5 mm) |
| Semi-automatic welding **COMBI 4.165 TURBO** | Air-cooled for welding with electrode wire in shielding gas by the MIG-MAG method |
| Inverter for welding **Prestige TIG 185 DC HF/Lift** | The method is TIG and MMA direct current with two types of ignition - TIG LIFT and high-frequency contactless ignition (HF) |
| PLASMA CUTTER **СВАРОГ МОДЕЛИ CUT 100** | Steel cutting up to 35mm<br>The maximum power is 100A |

# Expansion of machine park

| Name: | Characteristics: |
|---|---|
| Turning lathe<br>**Turner 560/2000**<br>**(February 2019)** | Max. workpiece length (mm) – 2000<br>Max. Workpiece diameter (mm) – 560 (785)<br>Technological course of X/Z axes (mm) – 130/316<br>Spindle rotational speed (rpm) – 25-1600<br>Power of spindle (kW) - 10 |
| **CNC** Turning lathe | Max. workpiece length (mm) – 400-700<br>Max. Workpiece diameter (mm) – 350-550<br>Spindle rotational speed (rpm) – up to 3000<br>Power of spindle (kW) – 10-15 |
| Injection-molding machines<br>**ТПА - 100** | The injection volume is not less than 100 cm 2<br>Recyclable material - Any thermoplastic with a processing temperature of up to 400 degrees. |
| Radial drilling machine<br>**Knuth R32 basic** | Drilling diameter – up to 32 mm<br>Boom – 320-820<br>Distance from spindle nose to table – 320-860<br>Spindle rotational speed – 75-1220 rpm |

# Activities
## of the Prototyping Center

**Number of completed works for NU for the period:**

**43** applications in 2015 → **107** applications in 2016 → **180** applications in 2017 → **212** applications in 2018 (and 34 supply contracts)




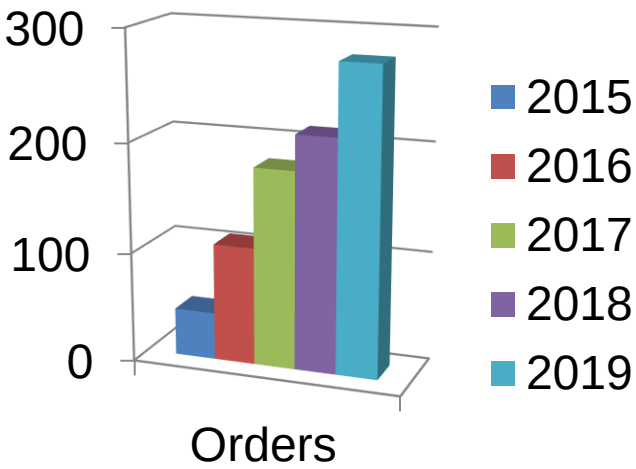


NAZARBAYEV UNIVERSITY
RESEARCH AND INNOVATION SYSTEM

# Shell Eco-Marathon Car

Singapore, 11-14 March 2018

# Project Examples


NU students together with the engineers from Prototyping Center have designed and built an eco-friendly and energy-efficient car for Shell Eco-Marathon

**Were designed and manufactured:**

- ★ Car carrier frame;
- ★ Steering gear;
- ★ Body;
- ★ Mounts for engine, battery and car body.

***A group of engineers assisted students with the entire stage of building a car.***

Shell Eco-marathon® ASIA

# Analysis of pipe specimens for corrosion

# Project Examples

**Developed:**

- **Structural diagram** entire installation for analysis;
- Installation **design documentation**;

**Manufactured:**

- flanges;
- fittings;
- sleeves,
- tees;
- half-turn cranes,
- mounting frame;
- system for heating and maintaining the required temperature.

**Final assembly and crimping system.**

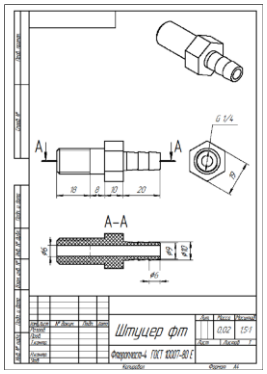


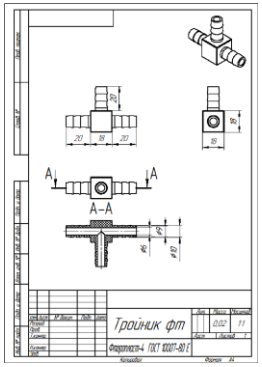


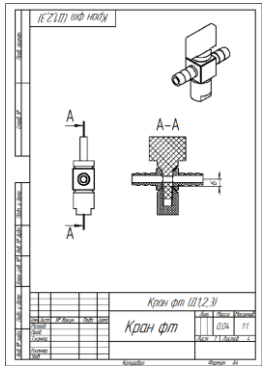


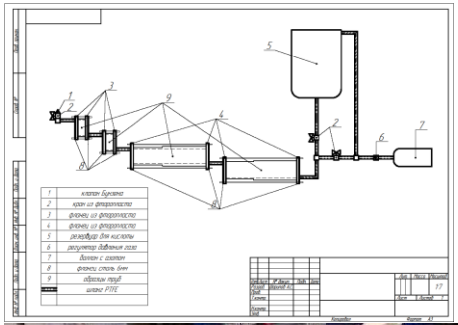


Contract with
"Karachaganak Petroleum"

# Exoskeleton

# Project Examples

the «School of Engineering» project
**"Development of an exoskeleton system for power support of the legs of a person in order to reduce its energy consumption"**

## Manufactured:

- ★ **Knee joints;**
- ★ **Hip joint;**
- ★ **Joint control scheme;**
- ★ **Signal reading circuit;**
- ★ **Final assembly of all elements.**

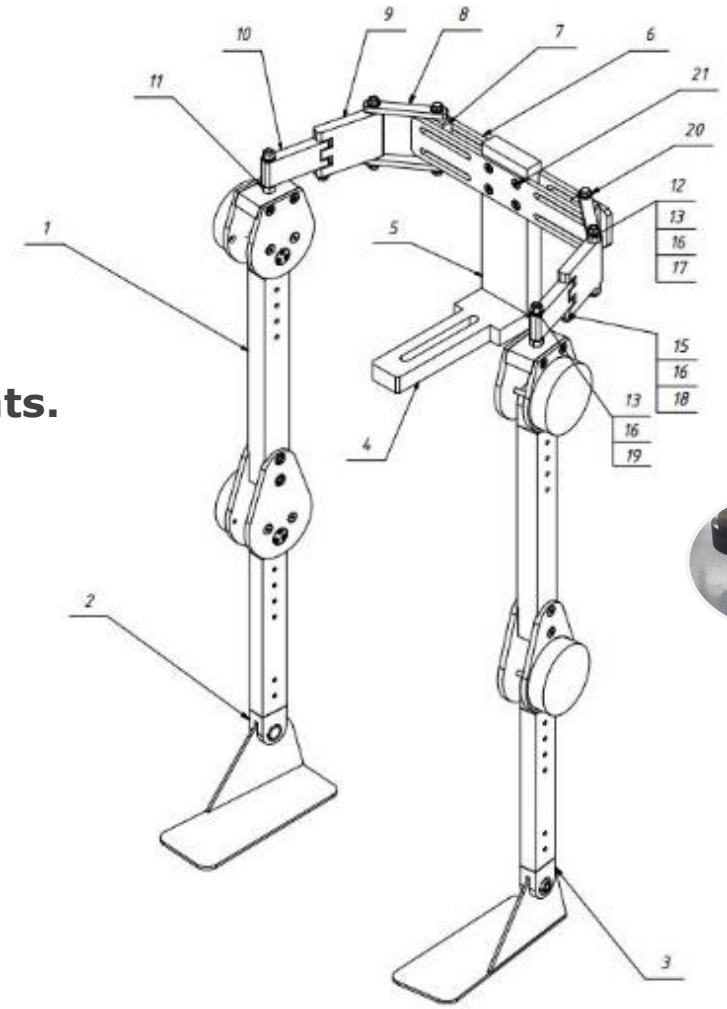


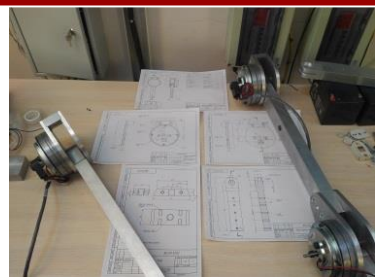

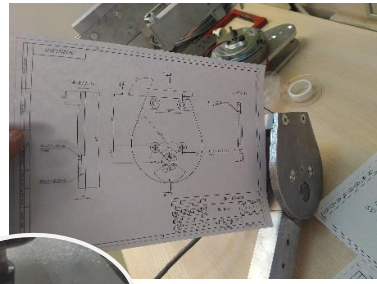

# Shell Eco-Marathon Car

For the electronic part were developed and manufactured:

- ★ **Driver and control unit;**
- ★ **Common electronic circuit of all on-board electronics;**
- ★ **Algorithm and engine control program;**
- ★ **Running and testing all electronic components.**

NU Team took the **13th place out of 26** in the category Prototype electric vehicle on an electric battery at Shell Eco-marathon Asia 2018 in Singapore


# Improving the fatigue calculation of offshore structures.

Ice-resistant construction with underwater module, which consists of a mono-tower structure with an underwater module and a suction base fixed to the seabed. At this stand, it is planned to conduct long-term studies, up to 6 months, to calculate the fatigue of the structure with regular loads.

**Developed:**

- **Structural diagram** of the test stand for prototype;
- Installation **design documentation**;
- **Electronic circuits;**
- **Data collecting program** (C++)**;**
- Real time **visualization** in MATLAB.

**Manufactured:**

- Shells of test models;
- Stand for analysis;
- Stand for strength health monitoring;
- Final assembling of the all mechanical and electronic parts.

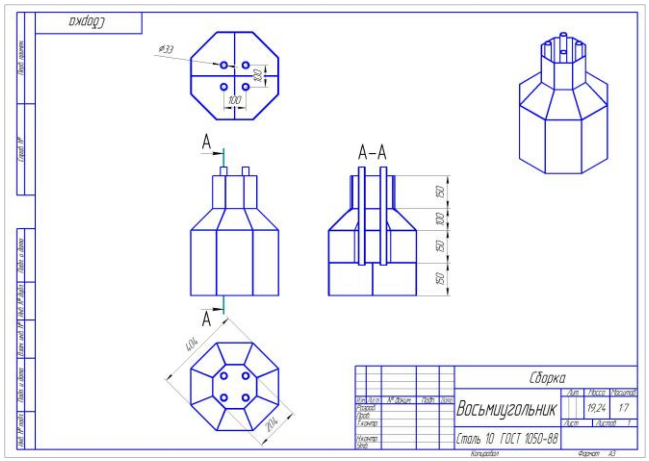


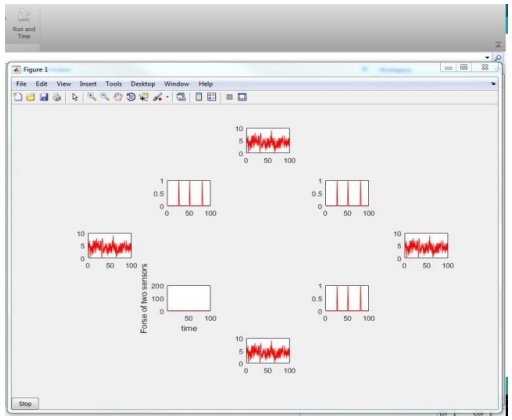


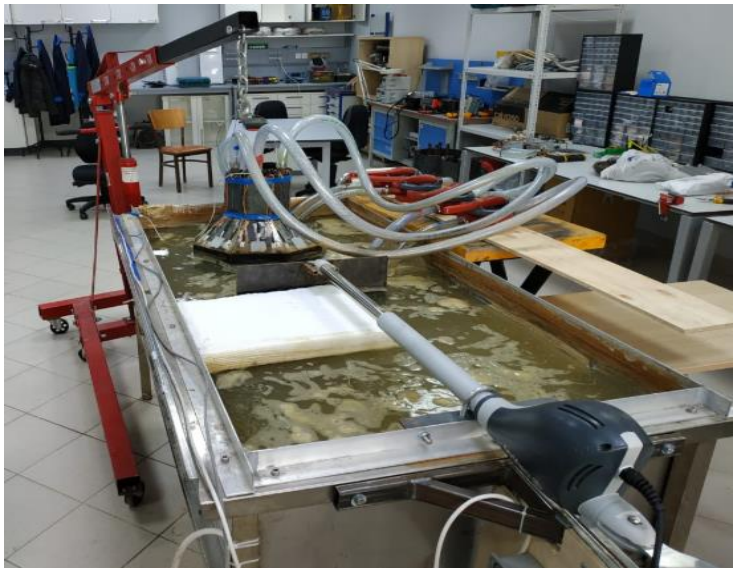

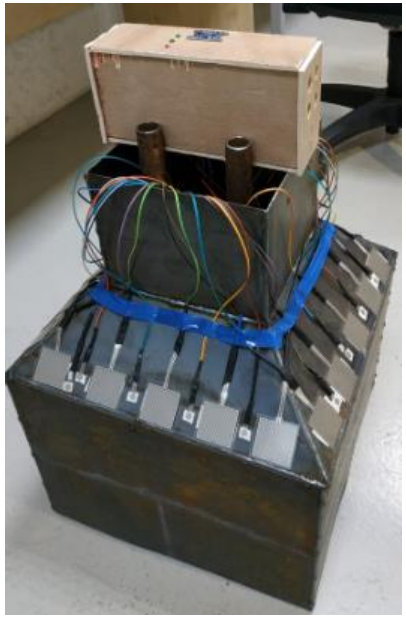

Prototype and test stand for the «School of Engineering»

# Vibration and weight-optimized material of metal-matrix cell with shape memory effect for space satellite structures.

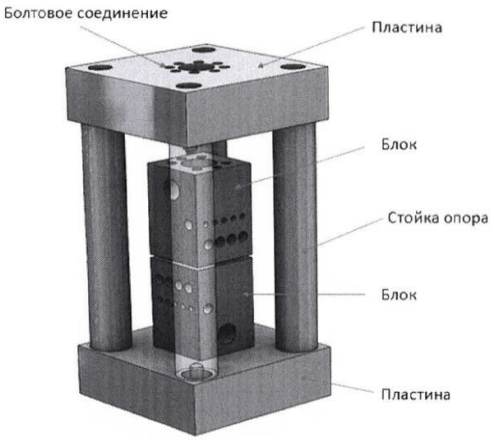


**Was done:**

- **Design documentation** for further manufacturing;
- Find out **materials and components**
- **Electronic circuits;**
- **All metal parts** of the frame.
- Selection and testing of **hydraulic systems** and **heating systems**
- **Final assembling** of the all mechanical and electronic parts.

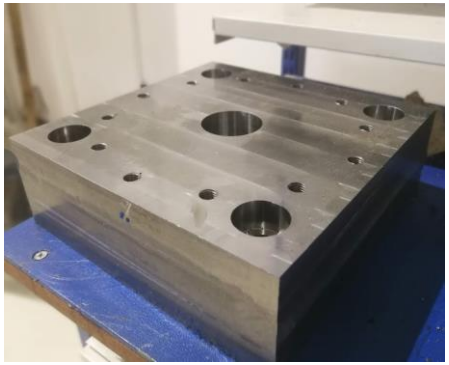

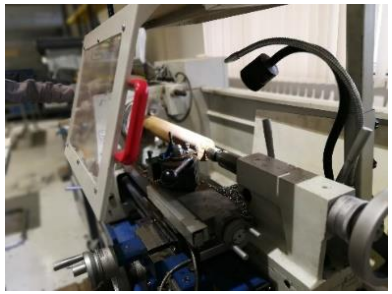

Test setup for the «School of Engineering» project

# Electronic workshop

Work to be done:

- anti-static furniture;
- basic equipment and electronic devices;
- oscilloscopes, generators;
- soldering station, laboratory power supplies

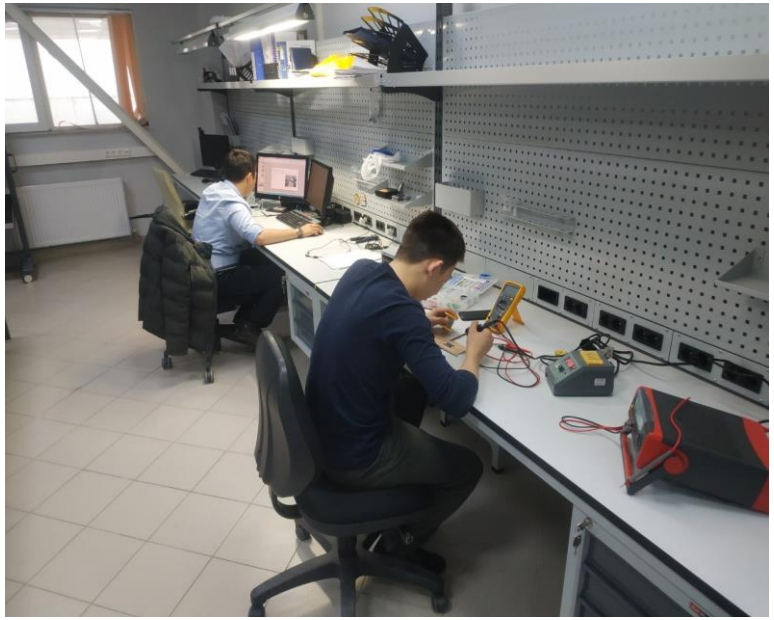

# Electronic equipment capabilities

# Electronic Workshop equipment

| Name | Characteristics |
|---|---|
| Oscilloscope<br>**Keysight DSOX3034T** | 100 MHz - 1 GHz, DSO and MSO models<br>Speed testing with simplified operation and documentation enabled by the 8.5-inch capacitive touch screen<br>See the most signal detail with 1,000,000 wfms/s update rate<br>Quickly modulate and characterize signals with built-in WaveGen 20 MHz ARB, 3-digit |
| Generator<br>**Aktakom**<br>**ADG-4351** | 2 Mpts Max Memory depth<br>32 parameters Auto measure function<br>Max recording length: 6 Mpts<br>6-digit Hardware Frequency Counter |
| DC Power Supply<br>**RXN-602D** | Voltage Output 0-60V<br>Current Output 0-2A<br>Voltage Display Precision 3 digit LED display: ± 1% ± 1 word |
| Multimeter<br>**Fluke 177** | Voltage DC: acc. ±(0.09% + 2) max.res. 0.1 mV max:1000 V<br>Voltage AC: acc. ±(1.0% + 3) max.res. 0.1 mV max:1000 V<br>Current DC: acc. ±(1.0% + 3) max.res. 0.01 mA max:1000 V<br>Current AC: acc. ±(1.5% + 3) max.res. 0.01 mA max:10 A<br>Resistance: acc. ±(0.9% + 1) max.res. 0.01 mAmax:10 A |
| Soldering station<br>**AOYUE 906** | • 35W Ceramic Element<br>• 3 in 1: Hot Air with stand and Soldering Iron<br>• Temperature and airflow adjustable via rotary knob |
| **Another Equipment for Electronic testing and Production** | Ultrasonic cleaner<br>Multimeters<br>Precise tools<br>Soldering quipment |

# Key directions of the EW

## Objectives:

1. Development of electronic devices for professors and scientists of NU
2. Provision of services for start-ups and young entrepreneurs
3. Development of engineering skills among students
4. Provision of professional trainings in the field of electronics;

## We offer:

- design of electronic circuits, PCB boards and devices;
- assembly of electronic components;
- development of automatic control systems;
- installation works with electrostatically sensitive; microcontrollers.


EAGLE

PCB

Altium Designer

# Stand for controlled convective drying of apple rings.

## Technical requirements

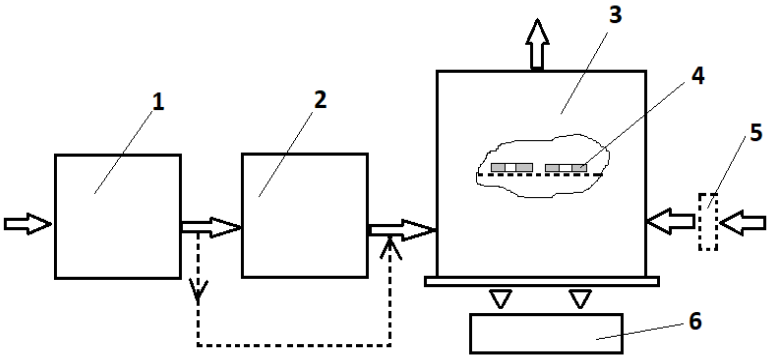


**On the exemplary draw:**

- **1** – Air drying module (with integrated fan),
- **2** – Air heating module,
- **3** – Desiccator,
- **4** – Product (apple rings),
- **5** – Fan,
- **6** – Scales.

## Results

Experimental stand for the «School of Engineering» project

# Castelloli Smart Scooter Challenge

For the all parts were developed and manufactured:

- ★ **Ergonomic design and electronic scheme;**
- ★ **Fast stop control system;**
- ★ **Android App for remote control;**
- ★ **Assembled and constructed in Prototyping Center.**

**NU Smart Scooter Team took the 1th place in the two categories of Castelloli Smart Scooter Challenge 2019 in Spain**



# JAYBOX
# Personal Smart Projector

Mobile Projection PC
Replacing the Traditional PC
This device is a mini projector with a laptop in a compact case. You can use it as a PC, cinema, Smart-TV, tablet.

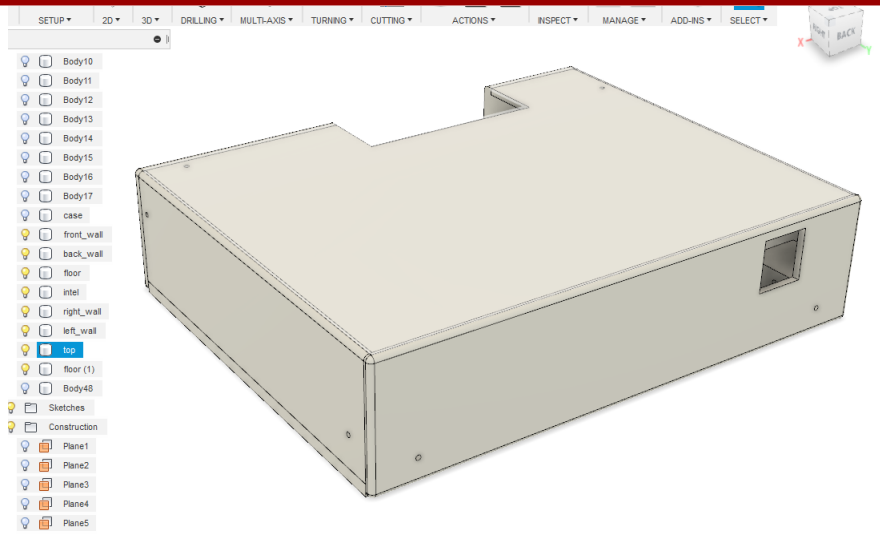


**Developed:**

- **Industrial design**
- **Device body**
- **Assembling parts**
- **Thermal calculation**

**Manufactured**

- **Shell of body**
- **Internal electronic connection**

Device body for acceleration program member

# Fab Lab courses and master classes

**Courses:**

- LabVIEW
- MATLAB
- Programming with Arduino for beginners
- Programming with Arduino for advanced users
- SolidWorks

**Master classes:**

- How to use 3D printers
- How to use small CNC milling machine
- How to work with vinyl plotter
- 3D modelling with Autodesk Fusion 360

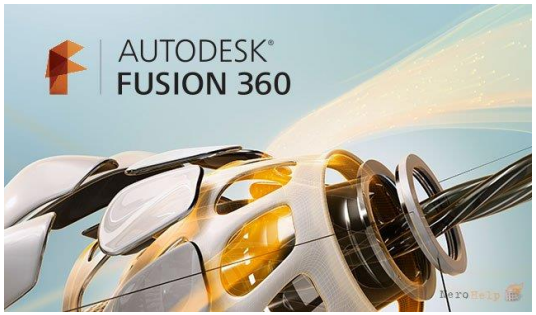



# Digital manufacturing

| Name | Characteristics |
|---|---|
| 3D printer<br>**Ultimaker 2+** | Max. acceptable print resolution - 20 microns<br>Max. print volume - 230x225x205 mm |
| 3D Large format printer<br>**SL-1001 “БЕГЕМОТ"** | Max. print volume - 1,2 cubic meters<br>Print material - All available plastics, incl. ABS, PLA, HIPS, FLEX |
| 3D scanner<br>**3D Systems Sense** | Scanner Operating Distance– от 20 до 160 cm<br>Scanning area– от 20x20x20 до 200x200x200 cm<br>Accuracy - from 1 mm |
| Bench top milling machine with CNC<br>**Roland SRM-20** | Max. working area - 203x152x60mm<br>The spindle rotation frequency is up to 7000 rpm<br>MATERIALS FOR CUTTING - CELLULOSE, Sanmodur, ABS, Wax, etc. |
| Desktop Cutting Plotter<br>**Roland CAMM-1 GX-24** | Maximum cutting area - 0,584x25 m<br>Cutting speed - 10-500 mm / s |
| Soldering stations: | **Weller WHS 40** and **Lafayette SSD-3** |
| Portal milling machine<br>**ShopBot PRSalpha 96-60** | Maximum cutting area- 2438,4x1524x152,4 mm<br>Step Resolution – 0,01 mm<br>Positioning accuracy – 0,05 mm<br>Materials of workpieces - wood, plastics, aluminum, etc. |

# Partners

Along with the capabilities of the Prototyping Center we also offer services of our **partners**

- ★ Design services
- ★ Tool selection
- ★ Modeling
- ★ Metalworking
- ★ Milling
- ★ Bending
- ★ Cutting of metal
- ★ Laser/Plasma/ Gas/Waterjet cutting of metal
- ★ Drilling
- ★ Welding
- ★ Turning works
- ★ Painting (powder, polymer, cold galvanizing)
- ★ Vacuum molding of plastics
- ★ Manufacture of metal structures of all types of complexity

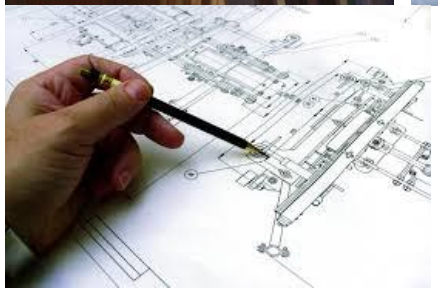

NAZARBAYEV UNIVERSITY
RESEARCH AND INNOVATION SYSTEM

**machineshop@nu.edu.kz**